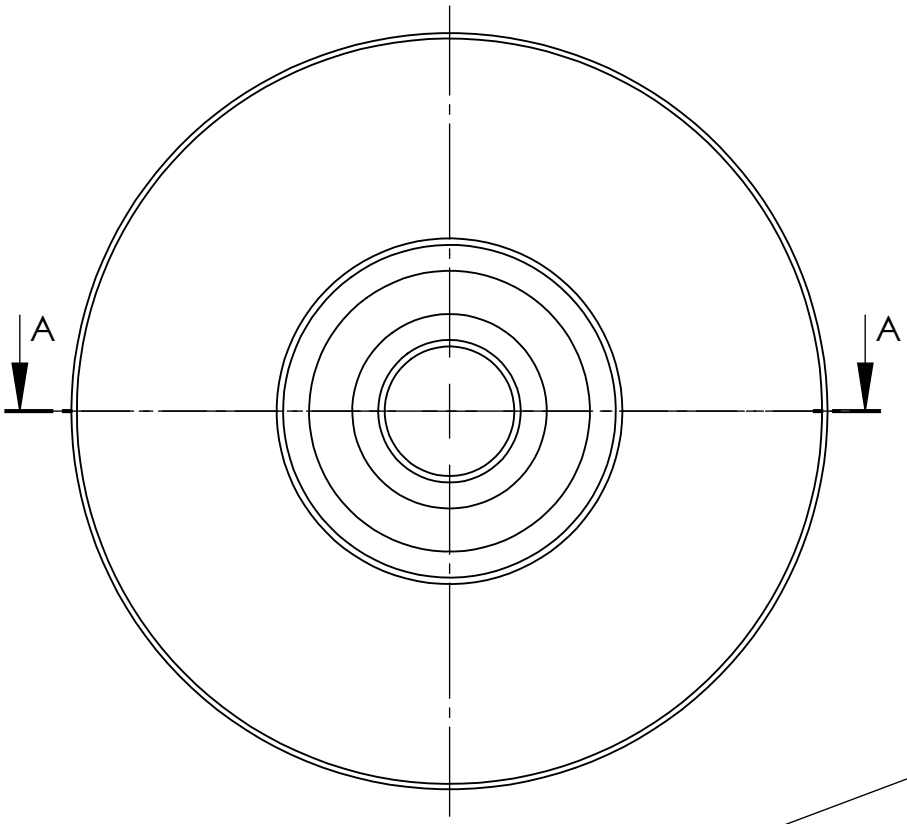

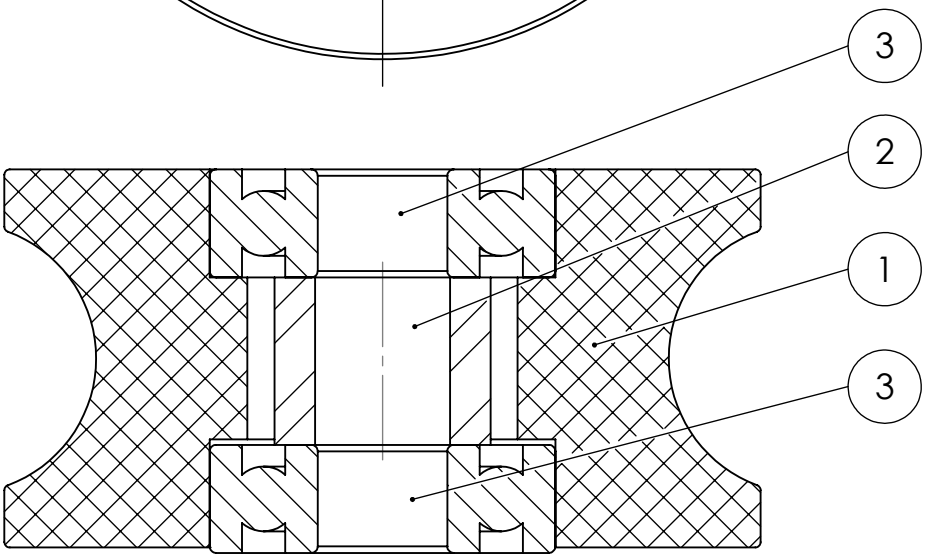

Montage samenstelling 103-XXXXX-516

ITEM NO.	SW-File Name(File Name)	DESCRIPTION	Length	QTY.	Material
1	13723	HPE rol ø70 met lagerkamer	35	1	PE High Density
2	13725	Buis. 3/8" A	15,50	1	S235J (1.0037) St.37-2
3	13726	* Lager 6201-2RS		2	

UNLESS OTHERWISE SPECIFIED:
DIMENSIONS ARE IN MILLIMETERS
SURFACE FINISH:
TOLERANCES:
LINEAR:
ANGULAR:

FINISH:

DEBUR AND BREAK SHARP EDGES

DO NOT SCALE DRAWING

REVISION

HOMBURG HOLLAND B.V.
It Noarderfjild 21, 9051 BM Stiens

	NAME	SIGNATURE	DATE
DRAWN	RDR		20-4-2013
CHK'D			
APPV'D			
MFG			
Q.A			

TITLE:

Rol-samenstelling

MATERIAL:

WEIGHT: 112.62g

DWG NO. 100-13534-517

A4

SCALE:1:1

SHEET 1 OF 1